BIRLA INSTITUTE OF TECHNOLOGY, MESRA, RANCHI

CLASS: B.TECH
BRANCH: ALL

Quiz: 01
SESSION : SP/2022

SUBJECT:EE101 Basics of Electrical Engineering

TIME: 1 HOUR

FULL MARKS: 10

INSTRUCTIONS:
1. The question paper contains 9 questions.
2. Answer all questions.
3. The missing data, if any, may be assumed suitably.

Q.1 For the circuit as given below, obtain the equivalent resistance at terminals ab. [1]

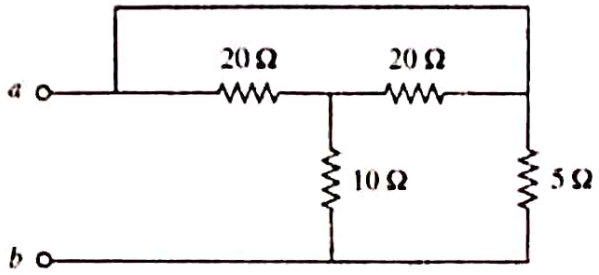

Q.2 Find the power absorbed by the 12- Ω resistor. [1]

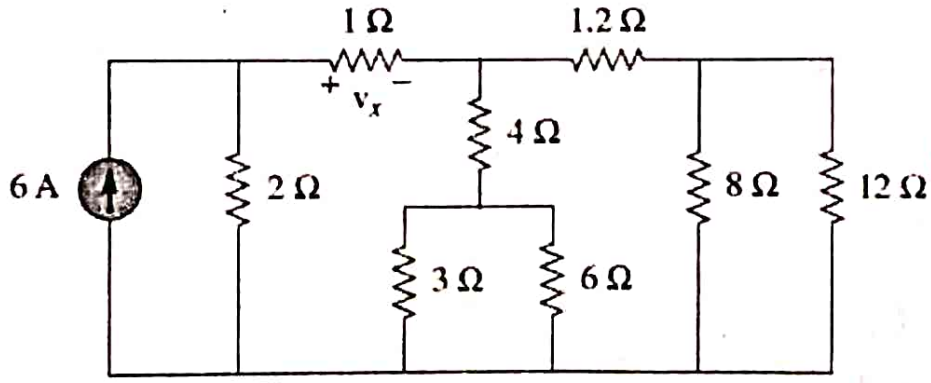

Q.3 Using nodal analysis, find the current i_o. [1]

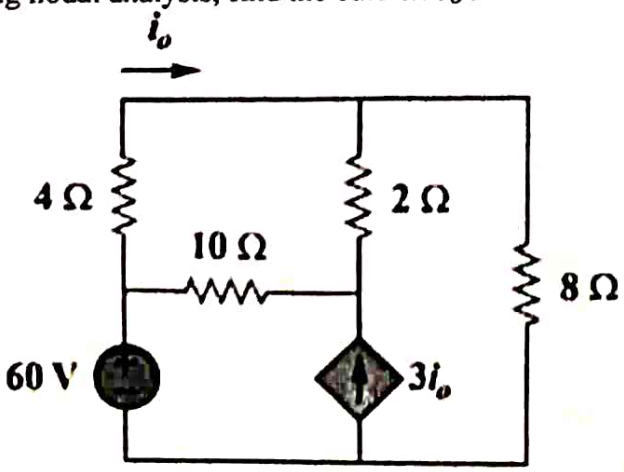

Q.4	Find i_3. 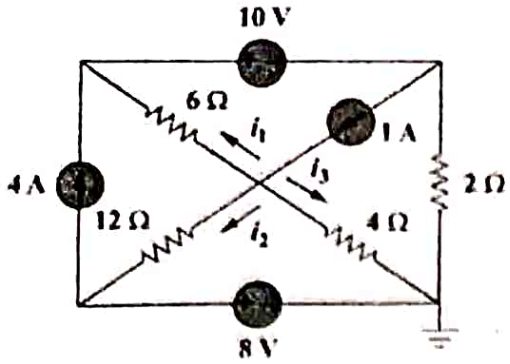	[1]
Q.5	Assuming that the switch in Fig. has been in position A for a long time and is moved to position B at t =0, find v_0 (t) for t ≥ 0. 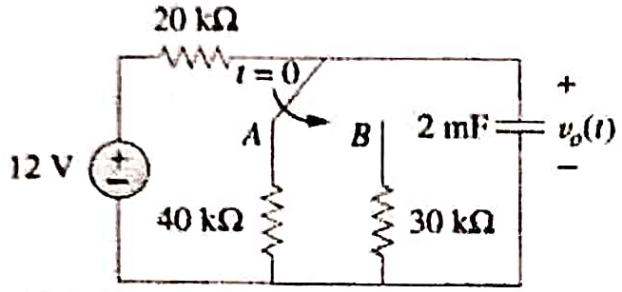	[2]
Q.6	A rechargeable flashlight battery is capable of delivering 85 mA for about 12 h. If it's terminal voltage is 1.2 V, how much energy can the battery deliver?	[1]
Q.7	Figure shows a rectangular magnetic core with an air gap. Find the exciting current needed to B = 1.2 T in the air gap. Given N = 400 turns and μ (iron) = 4000. 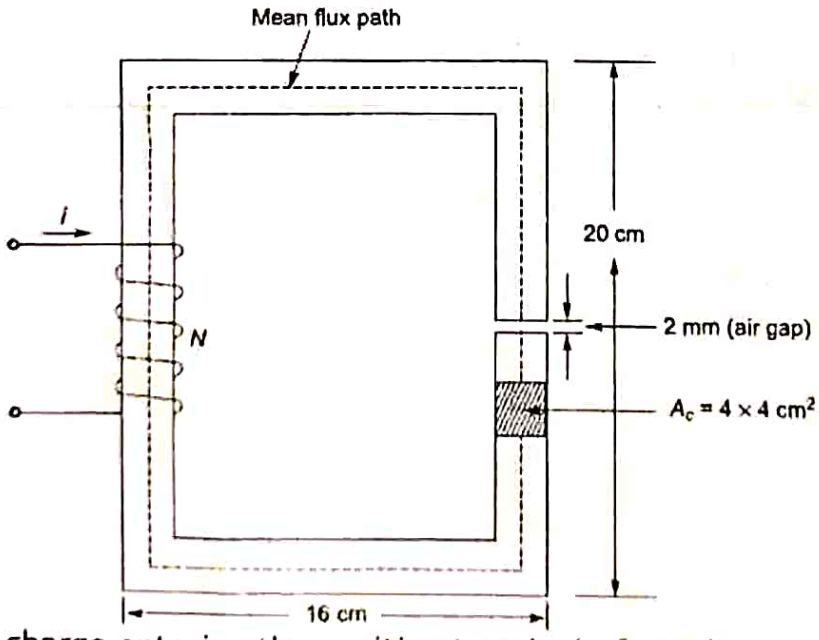	[1]
Q.8	The charge entering the positive terminal of an element is q = 10 sin 4πt mC, while the voltage across the element (plus to minus) is v= 2cos 4 π t V. Find the power delivered to the element at t = 0.3 s.	[1]
Q.9	A magnetizing force of 8000 A/m is applied to a circular magnetic circuit of mean diameter 30 cm by passing a current through a coil wound on the circuit. If the coil is uniformly wound around the circuit and has 750 turns, find the current in the coil.	[1]